NOTES
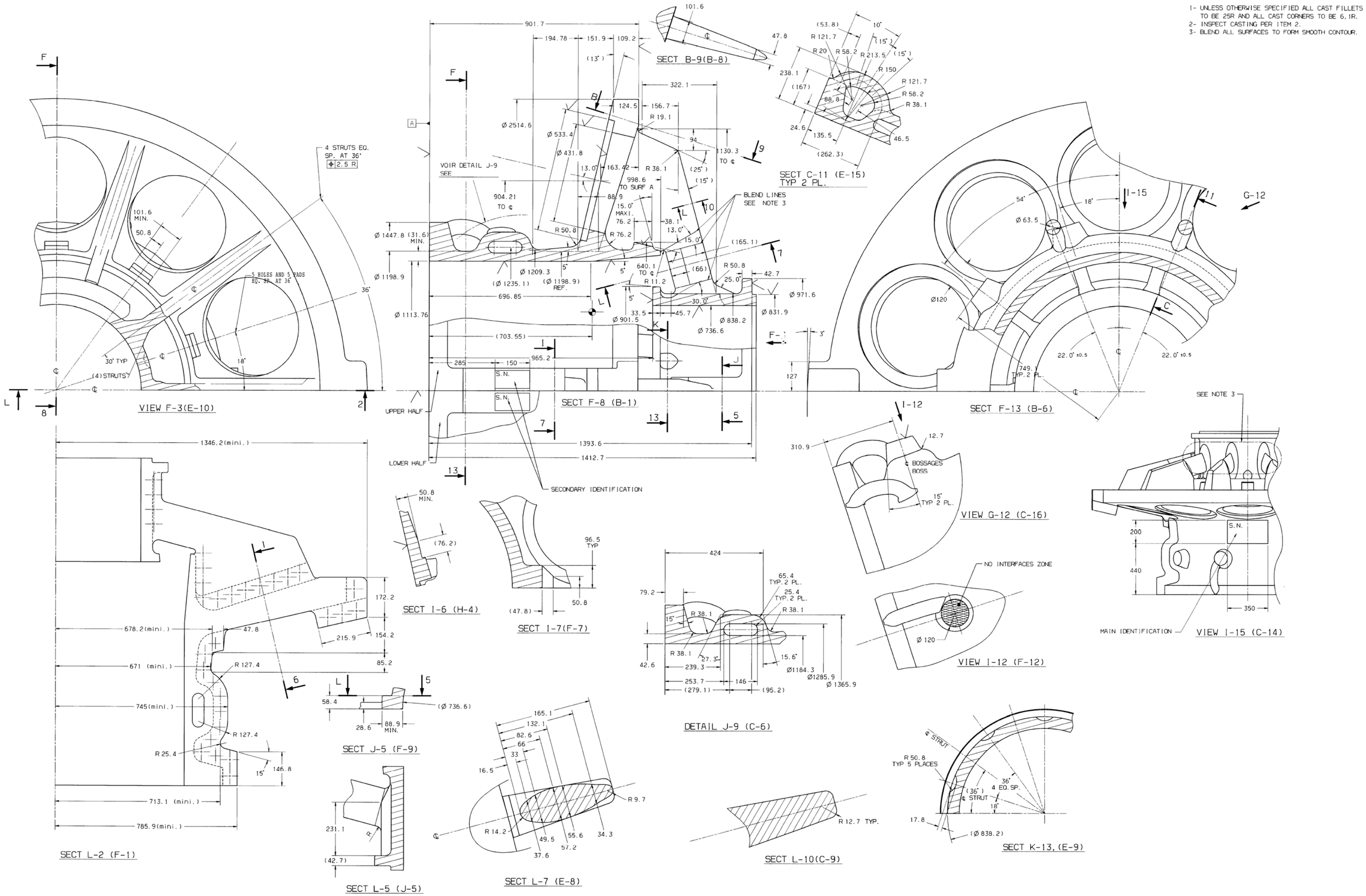
1- UNLESS OTHERWISE SPECIFIED ALL CAST FILLETS TO BE 25R AND ALL CAST CORNERS TO BE 6.1R.
2- INSPECT CASTING PER ITEM 2.
3- BLEND ALL SURFACES TO FORM SMOOTH CONTOUR.